joulia
15'28#0* ,"

"MK;@JAFF= EAL 5ĦJE=L9MK;@=J
!9FAN=9M <= <GM;@= 9N=; Ń;@9F?=MJ L@=JEAIM=
1@GO=J <J9AF ;@9FF=D OAL@ @=9L =P;@9F?=J
"GM;@=?GGL E=L O9JEL=OAKK=D99J

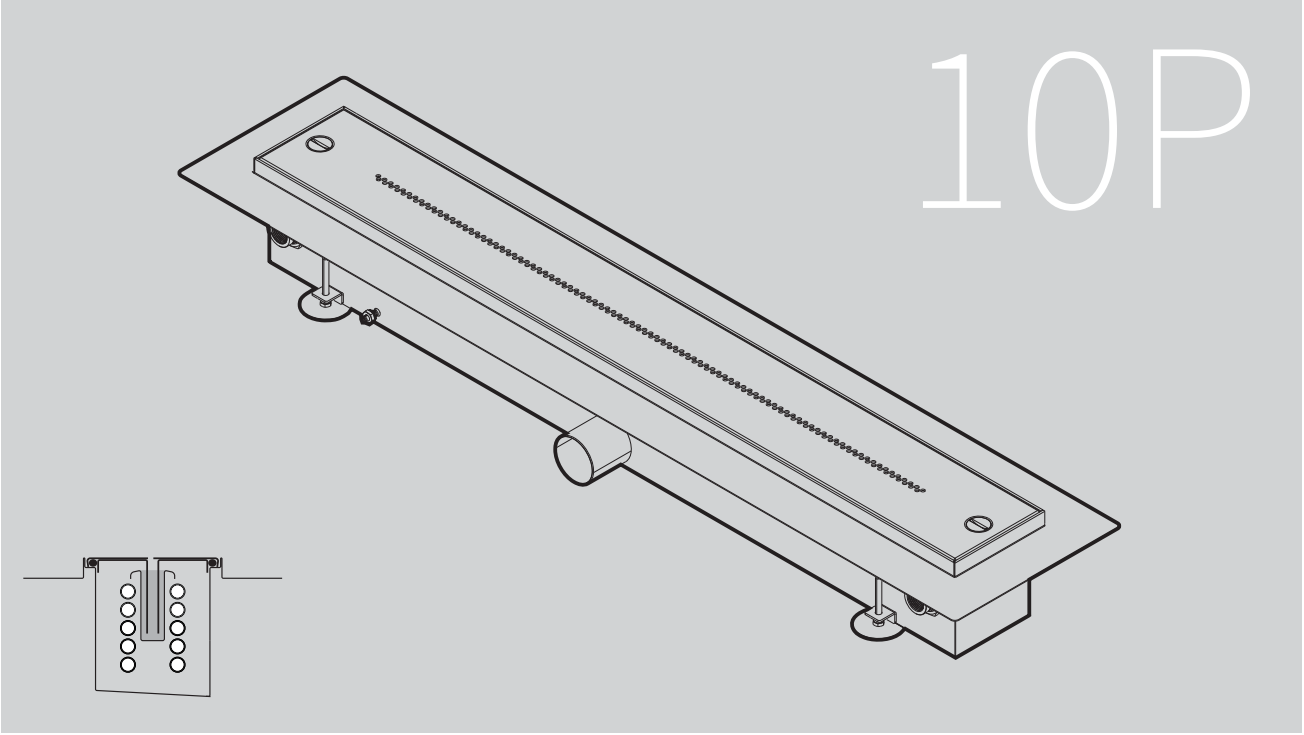

Montage- und Betriebsanleitung.
Notice de montage et de mise en service.
Installation and operating instructions.
Montage- en gebruikshandleiding.

kiwa

SVGW SSIGE

WRAS APPROVED PRODUCT

DVGW

joulia twinline
15'28#0* ,"

(GMDA9Y2OAFDAF=d+ d-;Lff

joulia

J6/DR-10P-830-R

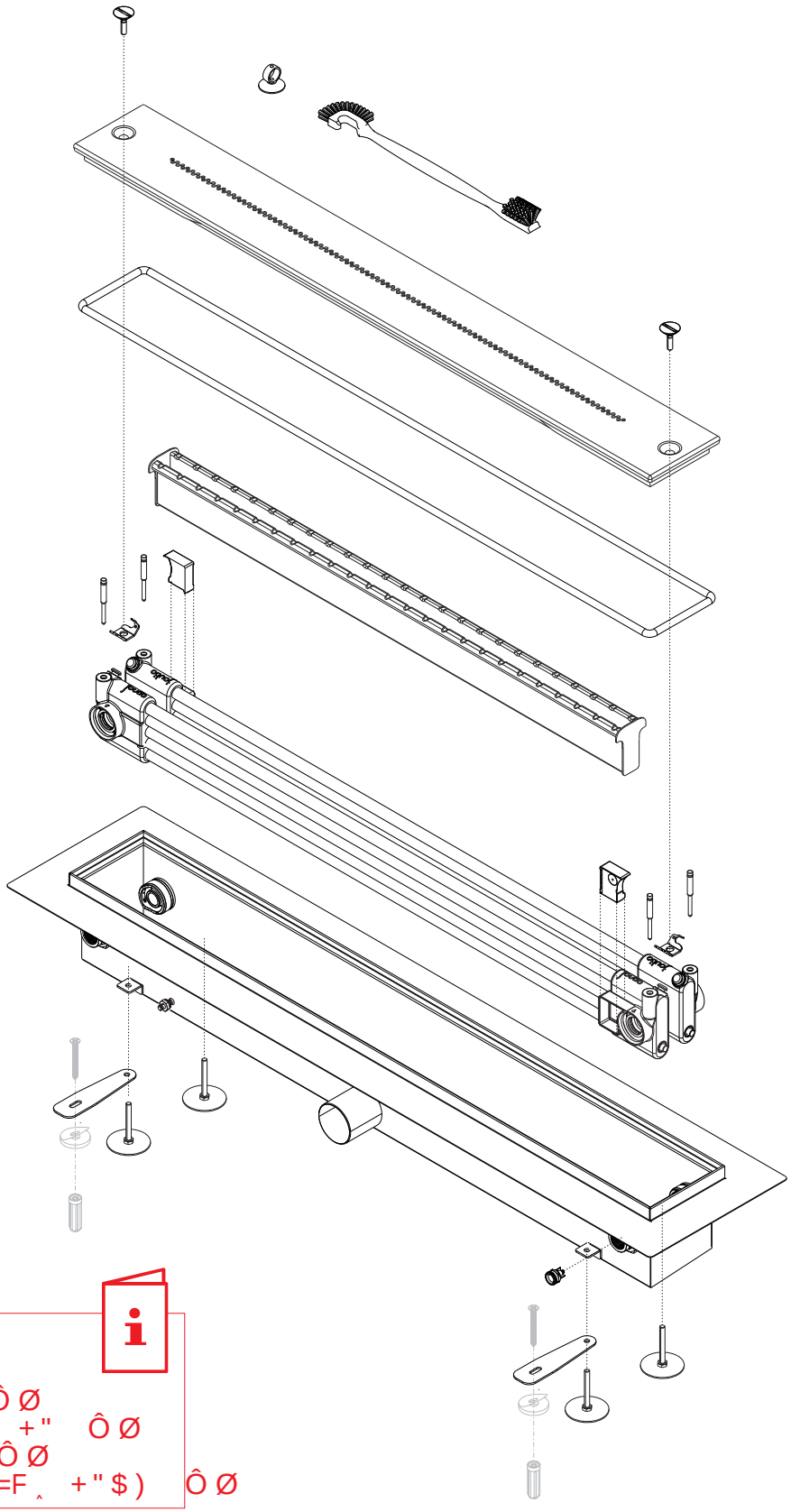

#JK9LRL=AD= $ / Ô Ø
.A ł ;=K <= J=;@9F?= + " Ô Ø
1H9J= H9JLK + " Ô Ø
4=JN9F?AF?KĜF<=J<=D=F + " $) Ô Ø

J6/DR-10P-830-R

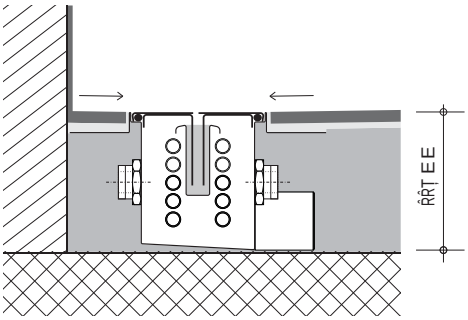

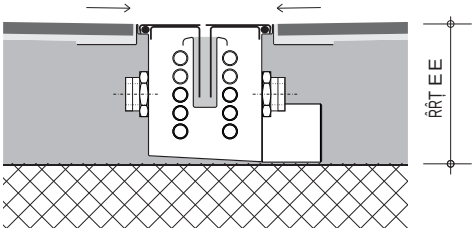

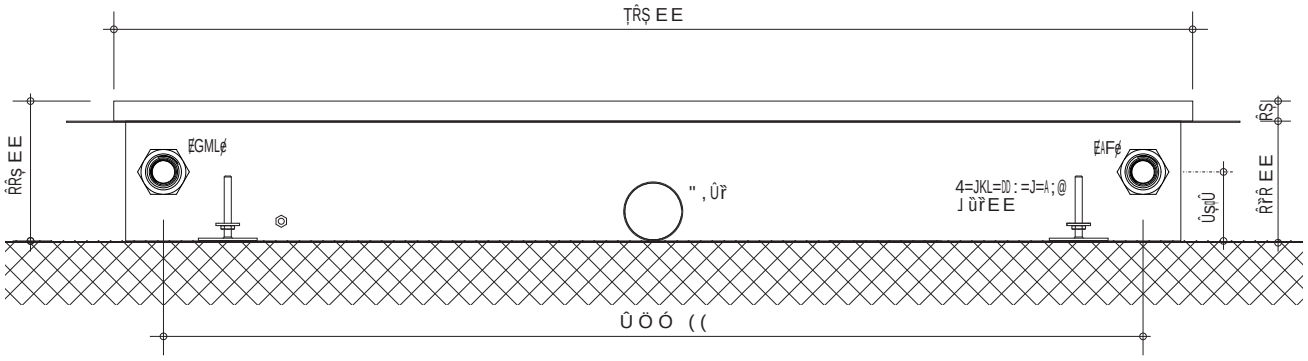

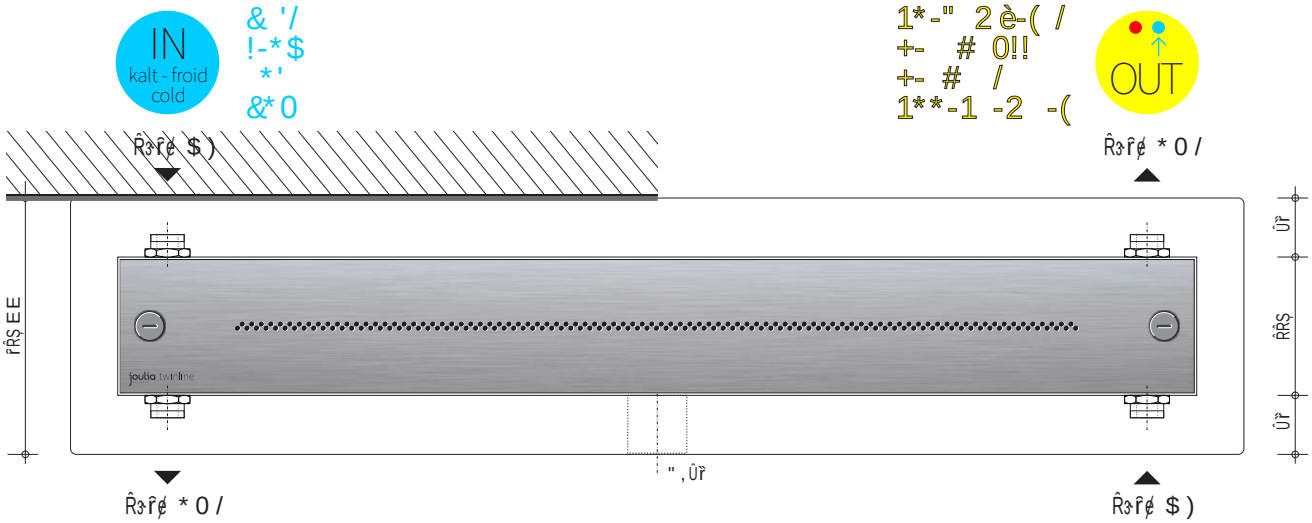

joulia
15'28#0* ,"

Anschlussschema
Schéma de montage
Installation Layout
Installatieschema

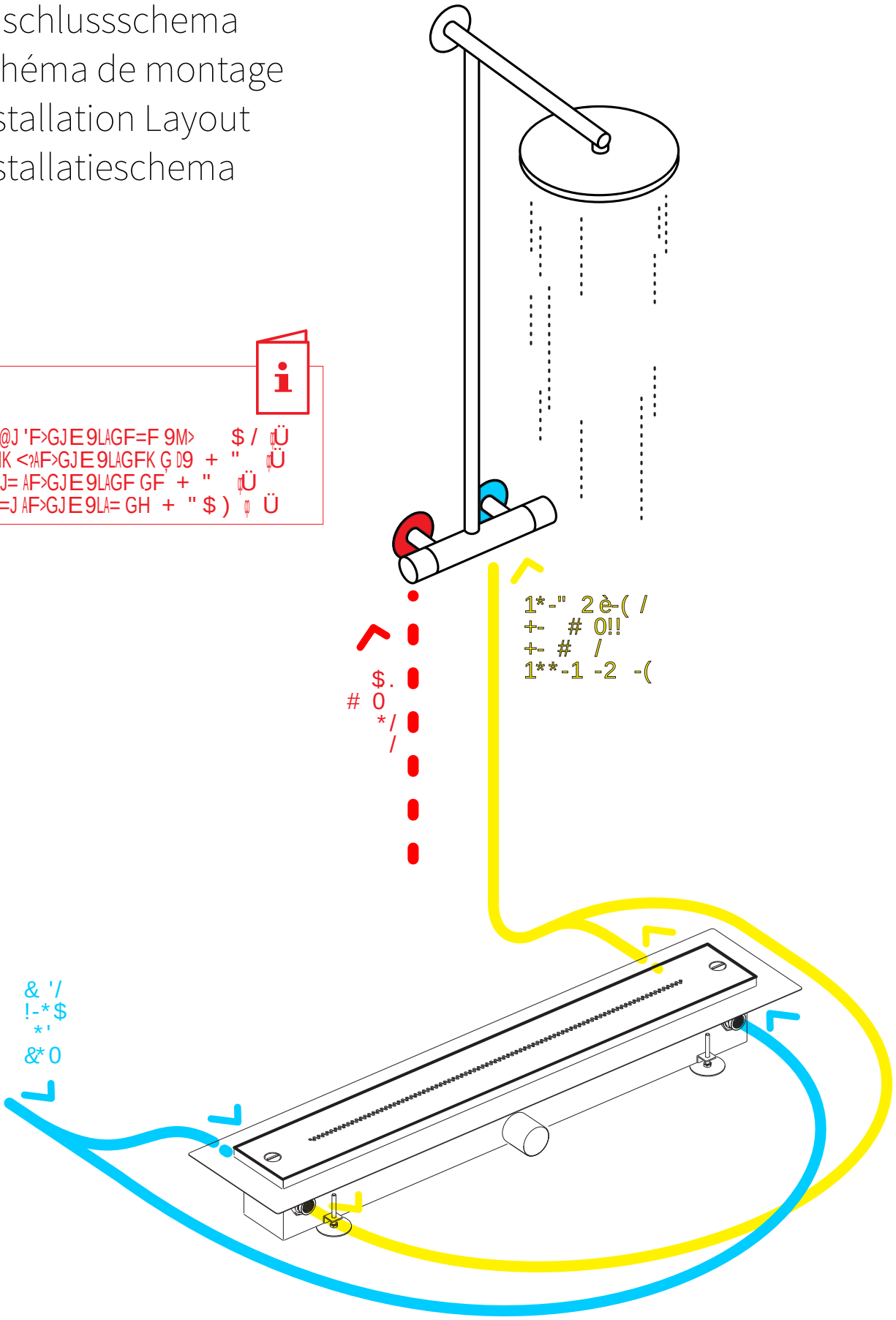

+=@J 'F>GJE 9LAGF=F 9M> $ / ÜÜ
.DMK <?AF>GJE 9LAGFK G D9 + " ÜÜ
+GJ= AF>GJE 9LAGF GF + " ÜÜ
+==J AF>GJE 9LA= GH + " $) Ü

(GMDA9Y2OAFDAF=d+ d-;Lff

YÙY

joulia

DE

*) / " 0) /-$.)' $/0)"

$ #/$" $)2$.
,9;@ ,#, ÎŘřřû<ţJ>=F AF =AF=E 2JAFCO9KK=JKQKL=E FMJ
2=AD= MF<)GEHGF=FL=F N=JO=F<=L O=J<=FA<A=F9;@<=F
9F=JC9FFL=F 0=?=DF<=J 2=;@FAC @=J?=KL=DDL OMJ<=Fţ

0 '$è//.5$ #) $) -))-/&) / #)$. #)
¾ -2 #0)"../'
1G R=A?L :=AKHA=DKO=AK=<9K)AO9Ɏ59KK=JR=A;@=FA<9KK
<A=K= =<AF?MF?=J>ţDDL AKLţ "9Jţ:=J @AF9MK EţKK=F<A=
N=JO=F<=L=F +9L=JA9DA=F<=J Ƀ4=JGJ<FMF?ţ:=J
+9L=JA9DA=F MF<!@=EAC9DA=F >ţJ<A=2JAFCɎ MF<
59JEO9KK=JN=JKGJ?MF?Ƀ=FLKHJ=;@=Fţ

"=J 9M@=JJ AKL ?=K=LRDA;@>ţJ<A= IM9DAL9LAN=F KH=CL=<=J
2JAFCO9KK=JN=JKGJ?MF? AE %=:ĦM<= N=J9FLOGJLDA;@ţ "A=
?=K9EL='FKL9DD9LAGF NGF<=J :?9:=KL=DD=ɗG>L<=J
59KK=JRĦ@D=Jɵ DA=?L AF K=AF=J 4=J9FLOGJLMF?ţ WF<=JMF?=F
MF< 59JLMF?=F 9F<=J FD9?=>9DD=F=:=F>9DDK MFL=J<A=K=
4=J9FLOGJLMF?ţ

"A='FKL9DD9LAGF<=J "MK;@JAFF=EAL 5ĦJE=JţC?=Ɏ
OAFFMF?<9J>FMJ<MJ;@$9;@H=JKGF=F=J>GD?=Fţ

4GJ 'FKL9DD9LAGF 0G@JD=ALMF? KHŢD=FƷ 'F :@ĦF?A?C=AL NGF
<=J 59KK=JIM9DALĦLA<=F ƁJLDA;@=F %=?=:=F@=AL=F MF<
<=F NGJ -JL ?=DL=F<=F =KLAE ĖMF?=F AKL<A="MK;@JAFF=
AF J=?=DEĦqA?=F :KLĦF<=F RM HJŢ>=F MF< RM O9JL=Fţ

$ # -# $/ 0è)1)/-$*)*)1 "$*) ':*
5=FF KA;@<A="MK;@=AE OM@=RMKL9F<:=>AF<=LɗC=AF
59KK=J<MJ;@>DMKKɵA KGDDL=<A=2=EH=J9LMJ ŕÛŧ! FA;@L
ţ:=JK;@J=AL=Fţ "A="MK;@JAFF=KGDDL=<9@=J FA;@L AF<=J
,Ħ@=NGF OĦJE=D=AL=F<=F 0G@J=FA 9M> @=Aqı=F
-:=J>DĦ;@=F G<=J AF OĦME=F AFKL9DDA=JL O=J<=FA AF<=F=F
<A=2=EH=J9LMJţ:=J=AF=F DĦF?=J=F 8=ALJ9ME ŕÛŧ!
ţ:=JKL=A?Lţ .*'$)- $ $ 0. #-$)) 0)
'/2 .. -' $/0)" # -)$ #/û

$ . . *-0&)/#è'/ $Ø'/ 0Q+ -
%=EĦKK<=MLK;@=E)MH>=JAFKLALML ɗ"', ÛŕŢÙŕŕɎɵ CƁFF=F
)MH>=JJG@J=MF<$ALLAF?K 9MK)MH>=J :ROţ)MH>=JɎ
D=?A=JMF?=F MF=AF?=K;@JĦFCL>ţJ 2JAFCO9KK=J N=JO=F<=L
O=J<=F O=FF<=J H&Ɏ5=JL H& ŞAÙ G<=J @Ƃ@=J AKL G<=J
O=FF :=A H&Ɏ5=JL=F ROAK;@=F H& ŞAŕ MF< H& ŞAÙ<=J 2-!Ɏ
5=JL ŘAÛ E?ɜ*ɗ?ɜEÙɵ FA;@Lţ:=JK;@J=AL=Lţ
ɗ2-!"%=K9ELE=F?=9F GJ?9FAK;@=E)G@D=FKLG>>ɵ

#)$. #)/
- +AF<=KL>DA=KK<JM;C ŘAŕ :9J
- +9PAE9D=J =LJA=:K<JM;C Ř ŕ :9J
- :D9M>D=AKLMF? ŕAŞ DɜK
- 1H=JJO9KK=J@Ƃ@=ÛŕE E
- =D9KLMF?KCD9KK=)Ù ɗE9Pţ ÙŕŕC?ɵ
-)9DLO9KK=JNGDME=F AE 5ĦJE=L9MK;@=J ŕţŞ D

FR

*/$ (*)/" / ($.) . -1$

(-,0 . $(+*)/ .
!GF>GJEŃE=FL Ç D9 FGJE=,#, ÎŘřřûA K=MD=K<=K HA!;=K=L
;GEHGK9FLK>9:JAIMŃK ;GF>GJEŃE=FL Ç<=K
JŃ?D=E=FL9LAGFK L=;@FAIM=K J=;GFFM=K H=MN=FL ńLJ=
MLADAKŃK <9FK MF KQKL!E=<?=9M HGL9:D=ţ

' ,0 '$/0)'*-)$.(*)/-B'
- *)) 0
.9J=P=EHD=AD=>ADA?J9F=<=)AO9 EGFLJ=IM=;=LL=
;GF<ALAGF 9 ŃLŃ J=EHDA=ţ #F GMLJ=AD=K E9LŃJA9MP MLADAKŃK
<GAN=FL ńLJ=;GF>GJE=K Ç D9 BJŃ?D=E=FL9LAGF KMJ D=K
E9LŃJA9MP=L HJG<MALK;@AEAIM=K HGMJ D?9DAE=FL9LAGF=F
=9M HGL9:D=<=F=9M;@9M<=K9FAL9AJ=Bţ

*=HJGHJAŃL9AJ=<M :ÎLAE=FL=KL DŃ?9D=E=FL J=KHGFK9:D=
<=K 9KH=;LK IM9DAL9LA>K<=D?9HHJGNAKAGFF=E=FL=F=9M
HGL9:D=<9FK D=:ÎLAE=FLţ *?AFKL9DD9LAGF ;GEHDɬL=<=HMAK
D=HGAFL<=DANJ9AKGF ɗKGMN=FL D=;GEHL=MJ <?=9Mɵ=KL Ç K9
;@9J?=ţ *=K EG<A>A;9LAGFK=L D?=FLJ=LA=F<=DAFKL9DD9LAGF
J=DɬN=FL Ń?9D=E=FL<=;=LL=J=KHGFK9:ADALŃţ

*?AFKL9DD9LAGF<M ;9FAN=9M<=<GM;@=9N=; JŃ;MHŃJ9LAGF
<=;@9D=MJ F=H=ML ńLJ=>>=;LMŃ=IM=H9J<=K KHŃ;A9DAKL=Kţ

OAF;=JD=K ;GF<MAL=K 9N9FL <?AFKL9DD=J ƷĦF >GF;LAGF<=D9
IM9DALŃ<=D?=9MA 9AFKA IM=<=K ;GF<ALAGFK=L<=K
<AKHGKALAGFK DG;9D=KA AD ;GFNA=FL<=;GFLJƀD=J=L
<?=FLJ=L=FAJD=;9FAN=9M<=<GM;@=Ç AFL=JN9DD=K JŃ?MDA=JKţ

0-$//+-1)/$*) '"$'*) ':*
*GJKIM=D=J=;=N=MJ<=<GM;@=<KL 9M J=HGK ɗH9K<=<Ń:AL
<?=9M<?9DAE=FL9LAGFA AD >9ML ŃNAL=JIM=D9 L=EHŃJ9LMJ=F=
<ŃH9KK=ŕÛŧ!ţ *=;9FAN=9M<=<GM;@=F=<GAL<GF;H9K
ńLJ=AFKL9DDŃ Ç HJGPAEALŃ<=LMQ9MP ;GF<M;L=MJK<=
;@9D=MJA KMJ<=K KMJ>9;=K;@9M<=K GM<9FK<=K HA!;=K Gţ
$D9L=EHŃJ9LMJ=<ŃH9KK=ŕÛŧ! H=F<9FL MF=DGF?M=
HŃJAG<=ţ +. $.*' -'*'-$" *0 # ' .
/0403 0 !*-$,0$.*0Ɋ1)/ûţ

+*- 0$/*)/$)/ *.(+*.)/. 0$1-
1=ƏGF DAFKLALML 9DD=E9F<<M ;MANJ=ɗ"', ÛŕŢÙŕŕɎɵA D=K
LMQ9MP=L J9;;GJ<K=F ;MANJ=<=L=F 9DDA9?=K<=;MANJ=
H=MN=FL ńLJ=MLADAKŃK K9FK J=KLJA;LAGF HGMJ D?=9M
HGL9:D=KA D9 N9D=MJ H& =KL<=ŞAÙ GM HDMK GM KA Ç<=K
N9D=MJK H& ;GEHJAK=K=FLJ=ŞAŕ=L ŞAÙA D9 N9D=MJ !-2F=
<ŃH9KK=H9K ŘAÛ E?ɜ*ɗ?ɜEÙɵ
ɗ!-2" IM9FLALŃ LGL9D=<=;9J:GF=GJ?9FA IM=ɵ

*)) . /#)$,0 .
- .J=KKAGF<QF9EA IM=EAFAE9D=ŘAŕ :9J
- .J=KKAGF<=K=JNA;=E9PAE9D=Ř ŕ :9J
- "Ń:AL<?Ń;GMD=E=FL ŕAŞ DɜK
- &9ML=MJ ?9J<=<?=9M ÛŕE E
- !D9KK=<=JŃKAKL9F;=)Ù ɗE9Pţ ÙŕŕC?ɵ
- 4GDME=<?=9M >JGA<<9FK D?Ń;@9F?=MJ ŕţŞ D

(GMDA9Ɏ2OAFWF=q+ q-:LŕŕF

joulia
1 5 ' 2 8 # 0 * , "

EN

) . / ' ' / $ *)) * ≠ $ } " $) . / - 0 / $ *) .

(+ * - /) /) * /.
; ; GJ<AF? LG , # , Ř ř ř û Á GFDQ H9JLK 9F< ; G E HGF=FLK
E9FM>9 ; LMJ=< AF 9 ; ; GJ<9F ; = OAL@ L@= J=; G?FAR=< JMD=K G>
L=; @FGDG?Q E9Q : = MK=< AF 9 <JAFCAF? O9L=J KQKL=E ¶

0 ' $ / 4 (-!& *-* ") $. /#) $ ' $) . + / $ *)
* 4
$GJ =P9 E HD=Á L@=) AO9 O9L=J E9JC AF<A ; 9L=K L@9L L@AK
; GF<ALAGF AK E=L ¶ 'F 9<<ALAGFÁ L@= E9L=JA9DK MK=< E MKL
; G E HDQ OAL@ L@= B - J<AF9F ; = GF +9L=JA9DK 9F< ! @= E A ; 9DK
>GJ " JAFCAF? 9F< &GL 5 9L=J 1MHHDQB ¶

2@= ; DA=FL AK D=?9DDQ J=KHGFKA : D= >GJ L@= I M9DAL9LAN= 9KH= ; LK
G> L@= <JAFCAF? O9L=J KMHHDQ AF L@= : MAD<AF? ¶ 2@= =FLAJ=
AFKL9DD9LAGF >JG E L@= HGAFL G> <=DAN=JQ ď G>L=F L@= O9L=J
E=L=J9 AK @AK J=KHGFKA : ADALQ ¶ ! @9F?=K 9F< E9AFL=F9F ; = G>
L@= KQKL=E 9DKG >9DD MF<=J L@AK J=KHGFKA : ADALQ ¶

2@= K@GO=J <J9AF OAL@ @=9L J=; GN=JQ E9Q GFDQ : =
AFKL9DD=< : Q KH= ; A9DAKLK ¶

=>GJ= AFKL9DDAF? >DMK@ HAHAF? KQKL=E 7 2@= >ALLAF? E MKL : =
; @= ; C= 9F< E9AFL9AF=< 9L J=?MD9J AFL=JN9DK <=H=F<AF? GF
L@= O9L=J I M9DALQ 9F< AF 9 ; ; GJ<9F ; = OAL@ L@= DG ; 9D
; GF<ALAGFKÁ 9F< JMD=K 9F< J=?MD9LAGFK 9HHDA ; 9 : D= 9L L@=
KAL=¶

! / 4) +1-) / $ *) ! *'" $ *) ' . ' $.
5 @=F L@= K@GO=J AK 9L J=KL ď FG O9L=J >DGO9Á L@= L=E H=J9Y
LMJ= K@GMD< FGL =P ; ==< ř Ů ! ¶ 2@= K@GO=J <J9AF K@GMD<
L@=J=>GJ= FGL : = AFKL9DD=< F=9J @=9LY ; GF<M ; LAF? HAH=KÁ GF
@GL KMJ>9 ; =K GJ AF JGG E K O@=J= L@= L=E H=J9LMJ= OADD
=P ; ==< ř Ů ! >GJ 9F =PL=F<=< H=JAG< G> LA E=¶ # - !* - ü
 *) * / $) . 0 ' / # . 2 # *- -$)) / #* ' 2 / -
' $) . û

$. *+ -0 / *) / $) . * + + -* (+ *)) / .
; ; GJ<AF? LG L@= %=J E9F ! GHH=J DDA9F ; = ď " ' , Ů ř Ţ Ů ř Y ů Á
HAH=K 9F< >ALLAF?K E9<= G> ; GHH=J GJ ; GHH=J 9DDGQK ; 9F : =
MK=< >GJ HGL9 : D= O9L=J OAL@ FG J=KLJA ; LAGFK A> L@= H& N9DM=
AK Ş ¶ ù GJ @A?@=JÁ GJ L@= H& N9DM= AK : =LO==F Ş ¶ ř 9F< Ş ¶ ù 9F<
L@= LGL9D GJ?9FA ; ; 9J : GF ď 2 - ! 9 N9DM= <G=K FGL =P ; ==< Ř ¶ Ů
E ? 3 * ď ? 3 E Ù 9 ¶
ď 2 - ! " LGL9D 9 E GMFL G> GJ?9FA ; ; 9J : GF 9

) $ ' /

- +AFAE M E >DGO HJ=KKMJ= ÂÁ ř : 9J
- +9PA E M E GH=J9LAF? HJ=KKMJ= Ř ř : 9J
- 0= ; G E E=F<= >DGO HJ=KKMJ= Ù : 9J
- " J9AF H=J>GJ E9F ; = ř Á Ş D 3 K
- 5 9L=J LJ9H Û ř E E
- *G9< ; D9KK) Ù ď E9P ¶ Ù ř ř C ? 9
- ! GD< O9L=J NGDM E = AF @=9L =P ; @9F?=J ř ¶ Ş D

NL

*) / ") $) ! / /$

') " - $ % *& + (- & $) "
, # , Ř ř ř û ?==>L <= =AK=F O99J99F ==F D=A<AF?O9L=JY
AFKL9DD9LA= E G=L NGD<G=F N9FMAL @=L GG?HMFL N9F NGDCKY
?=RGF<@=A<Á N=ADA?@=A< =F <G=D E 9LA?@=A<¶ " = FGJ E AK
: =<G=D< G E L= OGJ<=F LG=?=H9KL NGGJ =DC= FA=MO 99F L=
D=??=F D=A<AF?O9L=JAFKL9DD9LA= =F NGGJ MAL : J=A<AF?=FÁ
OABRA?AF?=FÁ ?=@=D= G> ?=<==DL=DABC= N=JFA=MOAF?=FÁ
@=JKL=DDAF?=F =F GF<=J@GM< N9F ==F : =KL99F<=
D=A<AF?O9L=JAFKL9DD9LA=¶

0 - (- & -)& / #) $. # 0 & $) " . $)) ./ /$
ABNGGJ : ==D<Á) AO9 5 9L=J E9JCÁ D99L RA=F <9L 99F <=R=
NGGJO99J<= AK NGD<99F ¶ " 99JF99KL E G=L=F <= LG=?=H9KL=
E9L=JA9D=F NGD<G=F 99F <= BJ=?=DAF? E9L=JA9D=F =F
; @= E A ; 9DAn F <JAFCY =F O9J E L9HO9L=JNGGJRA=FAF?B ¶
" = ?= : GMO =A?=F99J AK O=LL=DABC N=J9FLOGGJ<=DABC NGGJ
CO9DAL9LA=N= 9KH= ; L=F N9F @=L <JAFCO9L=J AF @=L ?= : GMO ¶
" = ?=@=D= AFKL9DD9LA= N9F9> @=L D=N=JAF?KHMFL dN99C <=
O9L=J E =L=J9 N9DL GF<=J RABF N=J9FLOGGJ<=DABC@=A<¶
9FH9KKAF?=F 99F =F @=L GF<=J@GM<=F N9F <= AFKL9DD9LA=
N9DL GGC @A=JGF<=J ¶
" = <GM ; @=?GGL E=L O9J E L=L=JM?OAFFAF? E9? 9DD==F
<GGJ KH= ; A9DAKL=F OGJ<=F ?= T FKL9DD==J<¶
4GGJ9>?99F<= <= AFKL9DD9LA=O=JCR99 E @=<=F <A=FL <=
CGM< O9L=JD=A<AF? ?=KHG=D< L= OGJ<=F ¶ " = 99FKDMALAF?=F
<A=F=F 9>@9FC=DABC N9F <= O9L=JCO9DAL=ALÁ DGC9D=
G E KL9F<A?@=<=F =F NGGJK ; @JA>L=F H=JAG<A=C
?= ; GFLJGD==J< =F 3 G> GF<=J@GM<=F L= OGJ<=F ¶

$ ' $ " # $ " $) *) ' ' +1-) / $
4GGJCG E <9LÁ O9FF==J <= <GM ; @=?GGLYOLO AF JMKLKL9F<
AK ď ?==F KLJG E AF? N9F 99FNG=JO9L=J 9 Á <= L=E H=J9LMMJ
@G?=J OGJ<L <9F ř Ů ! ¶ " = <GM ; @=?GGLYOLO E9? <99JG E
FA=L AF <= : MMJL N9F O9J E L= NG=J=F<= D=A<AF?=FÁ GH
O9J E = GHH=JND9CL=F G> AF JMA E L=K OGJ<=F ?= E GFL==J<
O99J <= L=E H=J9LMMJ D9F?<MJA? @G?=J <9F ř Ů ! ¶ * &
(" % * Ø * # / 2 / 2) * O& 2 / -
' $ $))") $ $ $. * ') û

$ / * - 0 / 1 / &+ -) * (+ *)) /)
MAR=F =F >ALLAF?=F N9F CGH=J E G?=F E=L @=L GG? GH ==F
E G?=DABC= GN=JK ; @JAB<AF? N9F <= ?J=FKO99J<=F N9F
CGH=JAGF=F NGD?=FK @=L <JAFCO9L=J : =KDMAL 9DD==F OGJ<=F
?= : JMACLÁ 9DK <= H&YO99J<= ¸ Ş A Ů AK G> 9DK : AB O99J<=F N9F
H& " Ş A ř ę Ş A Ů <= LGL9D= @G=N==D@=A< GJ?9FAK ; @ CGGDKLG>
2 - ! FA=L @G?=J AK <9F Ř A Û E ? 3 * ď ? 3 E Ù 9 ¶
ď 2 - ! " LGL9D= @G=N==D@=A< GJ?9FAK ; @= CGGDKLG>9

) $. # " "1) .

- +AFAE 99D N=J=AKL= <JMC ÂÁ ř : 9J
- +9PA E 9D= <JMC Ř ř : 9J
- 9F : =NGD=F <JMC Ù : 9J
- >NG=J ř Á Ş D 3 K = ;
- 5 9L=JKDGLÛ ř E E
- " JMC : =D9KLAF?CD9KK=) Ù ď E9P ¶ Ù ř ř C ? 9
- 4GDM E = CGM< O9L=J AF <= O9J E L=OAKK=D99J ř ¶ Ş D

(GMDA9Y2OAFMF=q+ q - ; L ř

joulia

1 5 ' 2 8 # 0 * , "

1 ; @9DDK ; @MLR¥1=L ďGHLAGF9D9

'KGD9LAGF H@GFA I M= ďGHLAGFF=D9

1GMF< AFKMD9LAGF K=L ďGHLAGF9D9

CG=KLAK ; @ H9CC=L ďGHLAAGF==D9

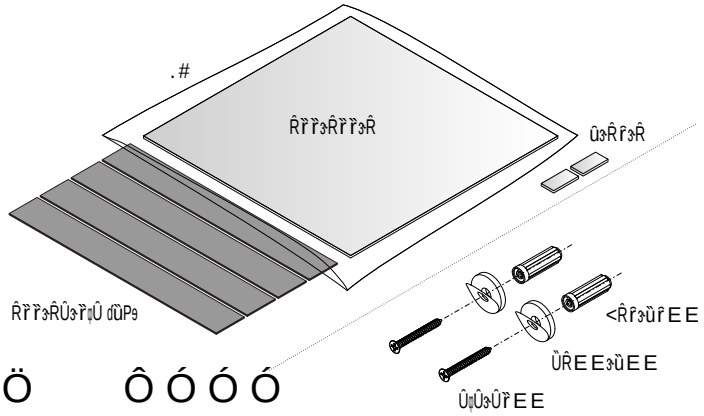

Ö Ô Ó Ó Ó

* * - $) ' / / $. $) - ')

DNGJ=FK <= (GMDA9 <GM ; @=?GGL 99F L= KDMAL=FA
EG=L=F ==F ; GFLJGD==J : 9J= L=JM?KD9?CD=H N9F
@=L LQH= # =F ==F CG?=DCJ99F AF <=
99FNG=J=F<= <JAFCO9L=JD=A<AF? OGJ<=F
?=ţFKL9DD==J<ţ

2=JM?KD9?CD=H LQH= #

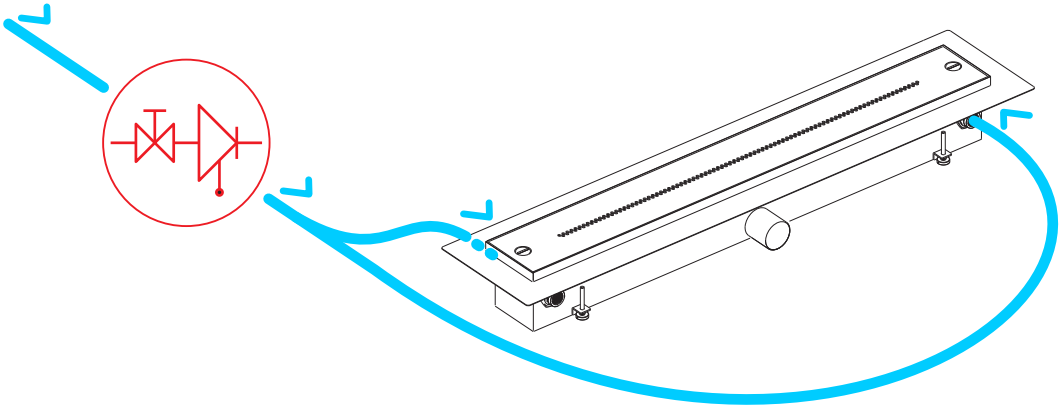

, # , Ȓřřû

5 =JCR=M?= Ř &AD>K E ALL=D

- MLADK =L 9A<=K

2GGDK Ř A<K

%=J==<K ; @9H Ř @MDH E A<<=D=F



Ȓřřee

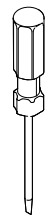

ùee



řPùee

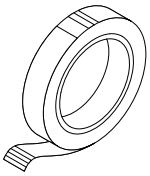

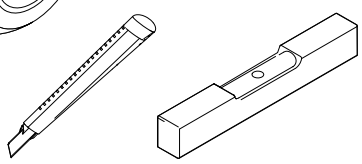

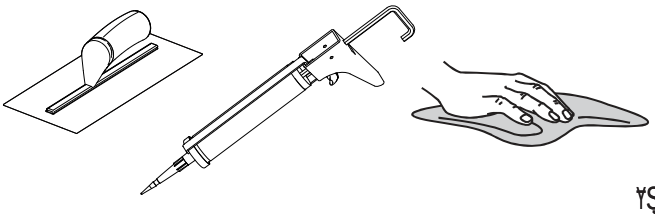

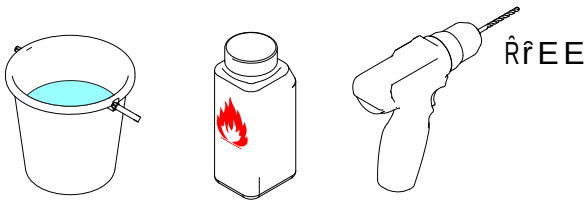

Ȓřee

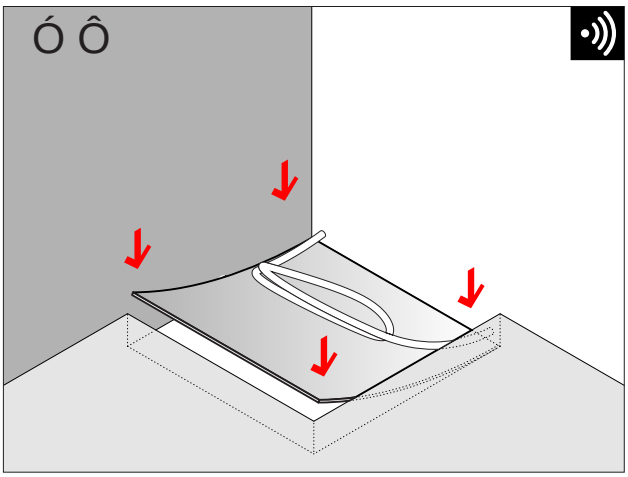
Ó Ô

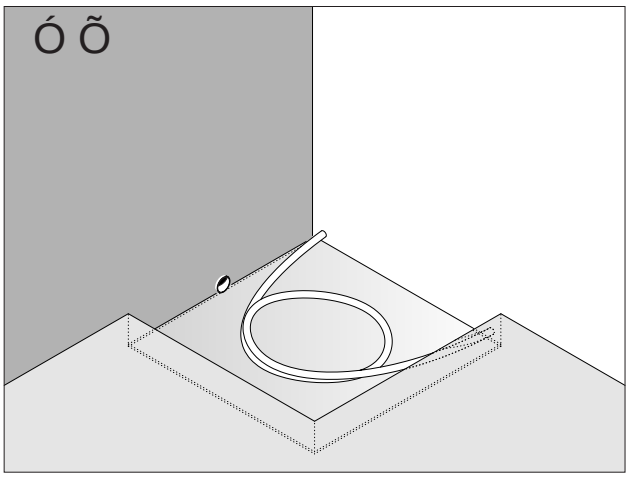
Ó Õ

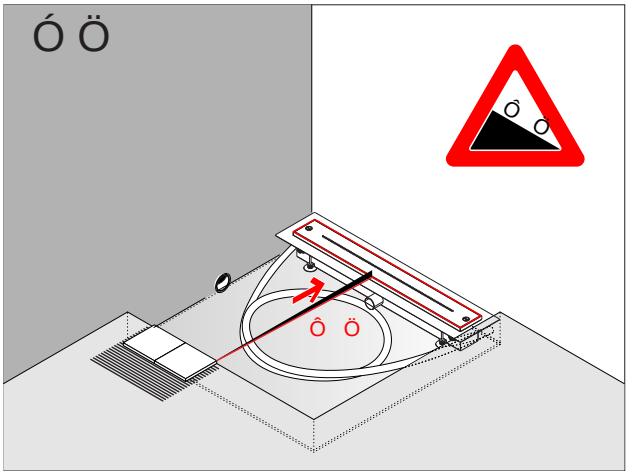
Ó Ö
Ô Ö

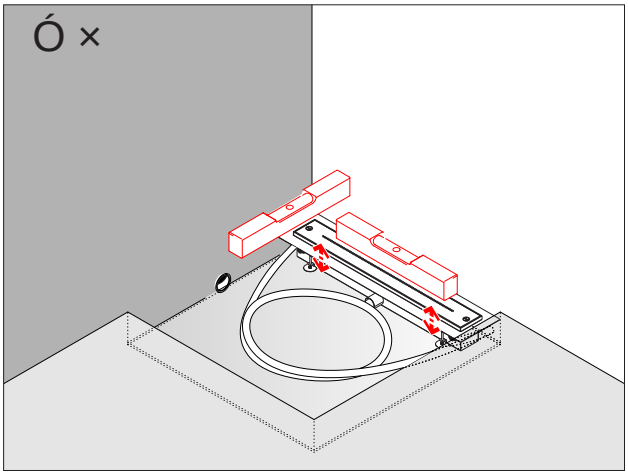
Ó ×

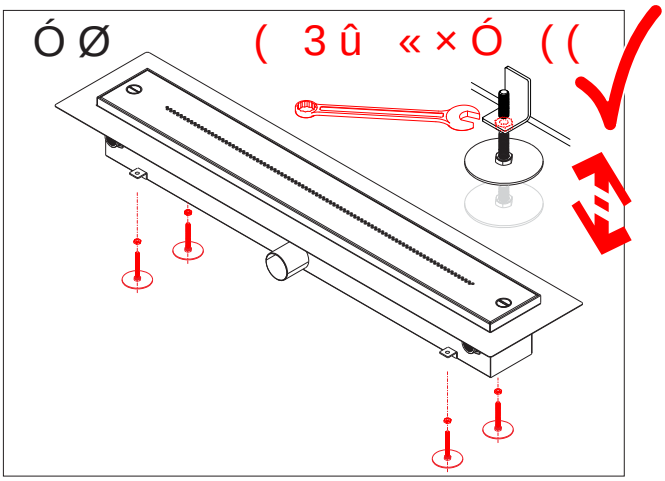
Ó Ø
(3 û « × Ó ((

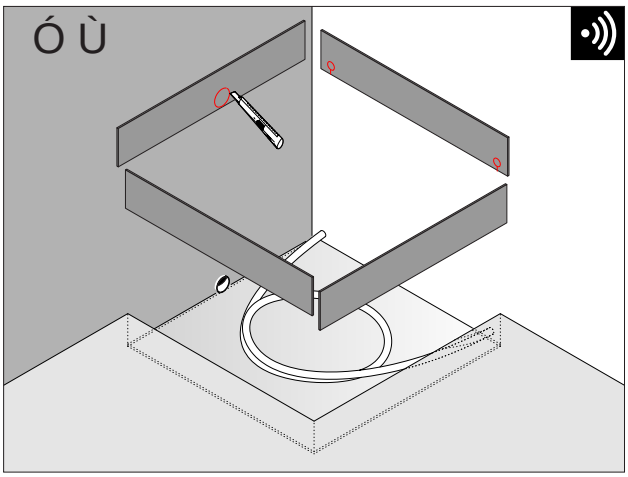
Ó Ù

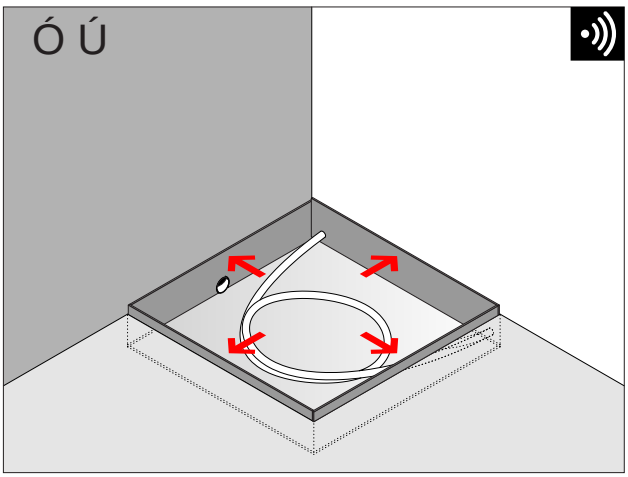
Ó Ú

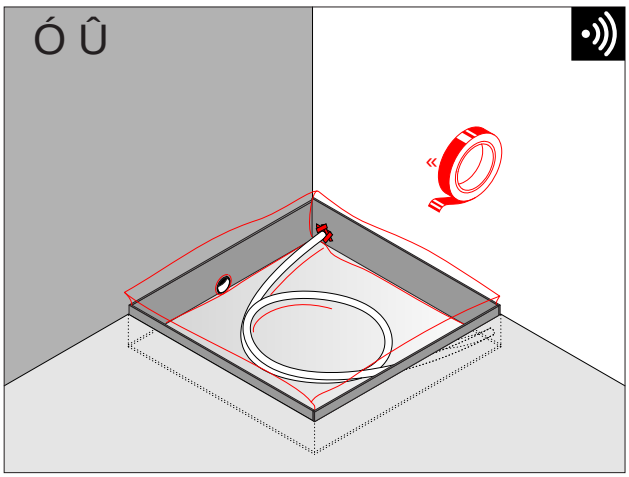
Ó Û

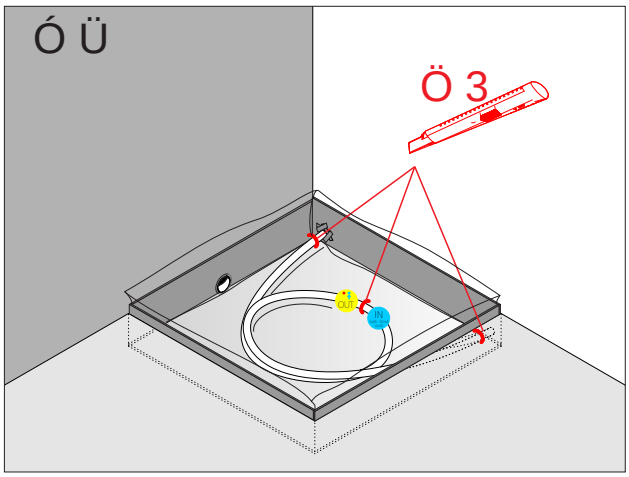
Ó Ü
Ö 3
OUT
IN

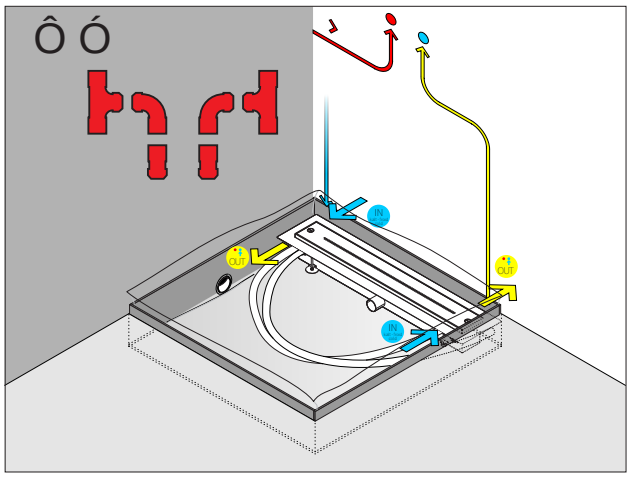
Ô Ó
IN
OUT
OUT
IN

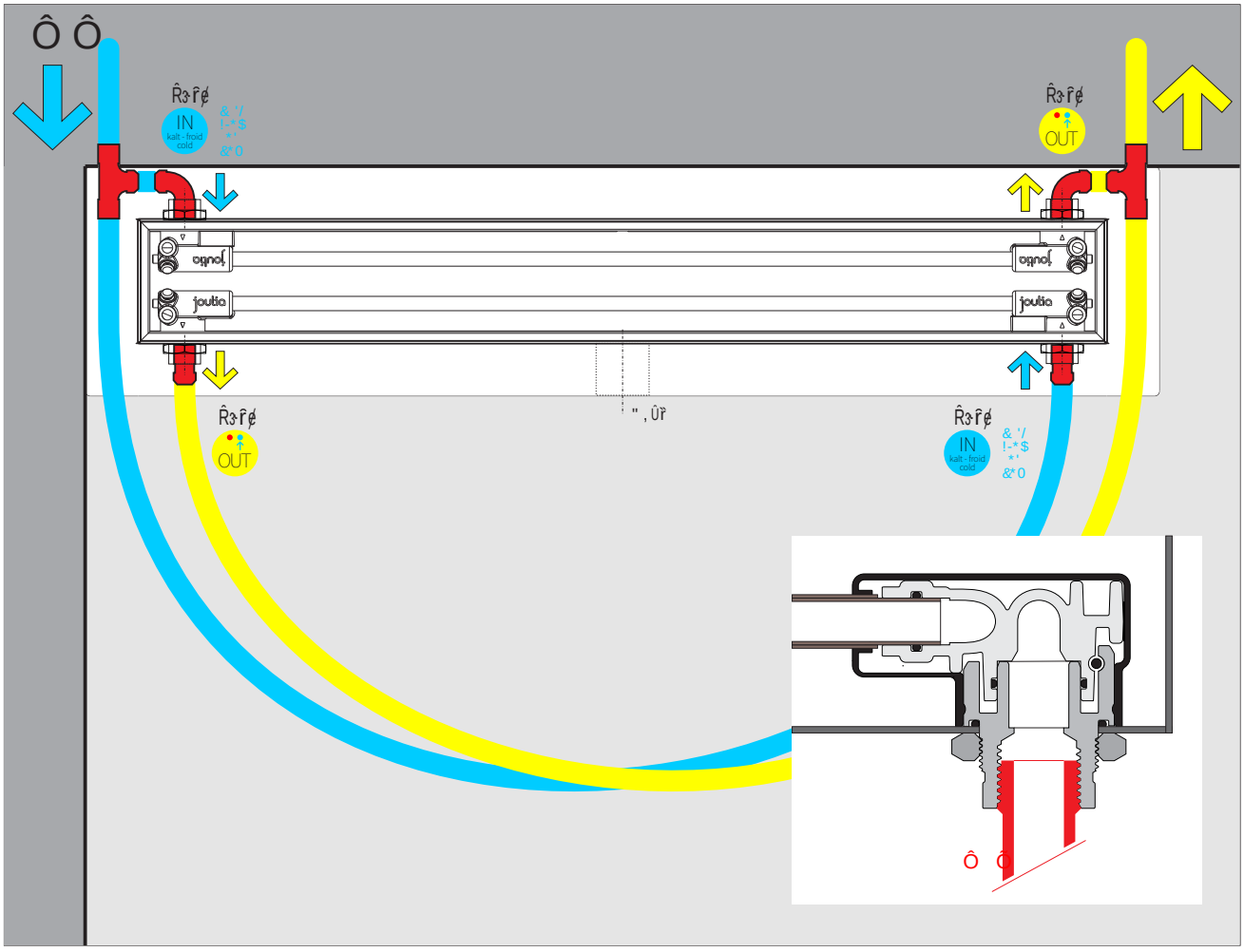
Ô Ô
IN
kalt - froid
cold
OUT
joutia
joutia
joutia
OUT
IN
kalt - froid
cold
Ô Ô

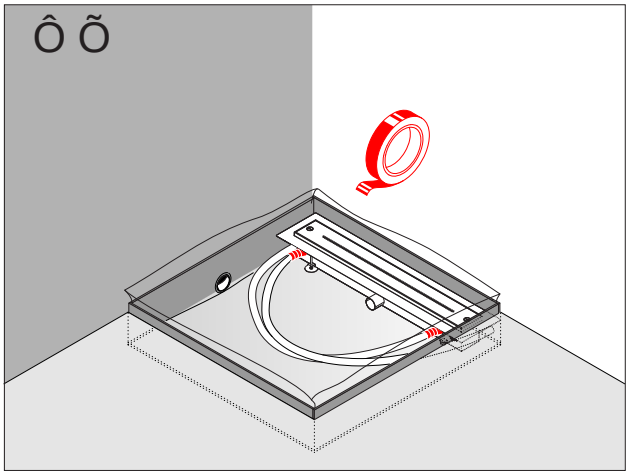
Ô Õ

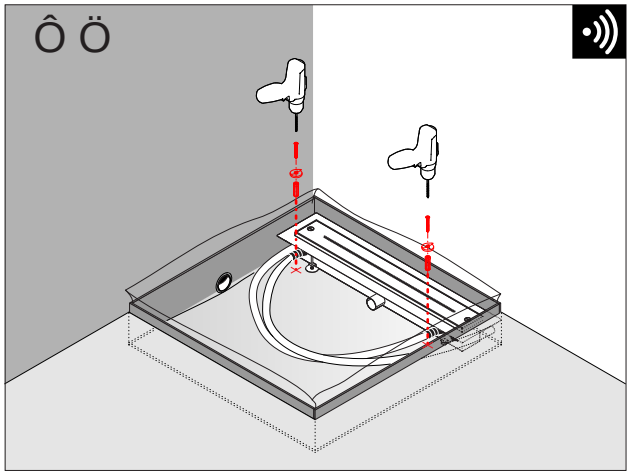
Ô Ö

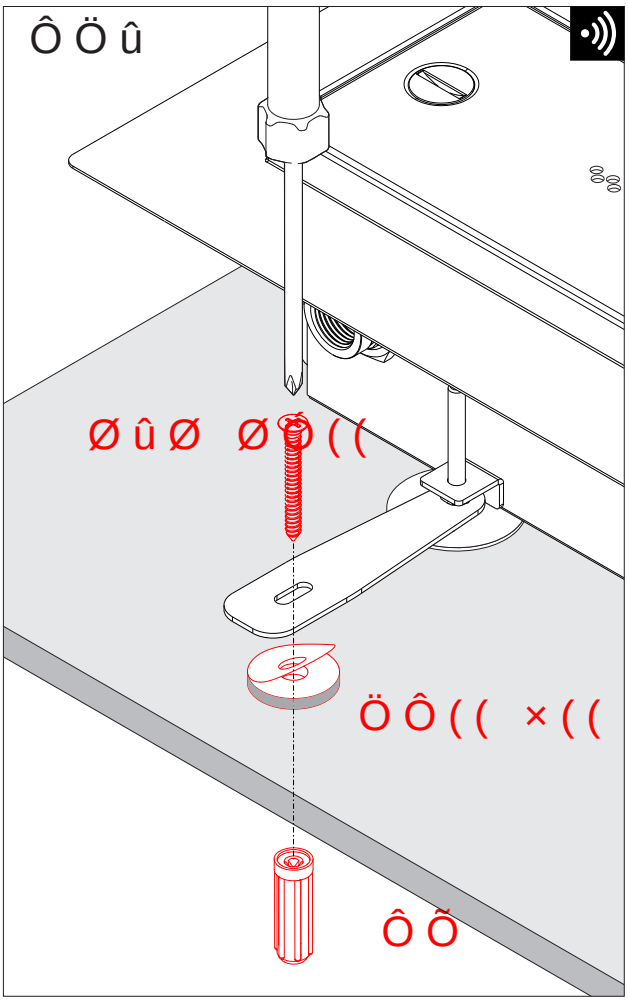
Ô Ö û
Ø û Ø Ø Ö ((
Ö Ô ((× ((
Ô Õ

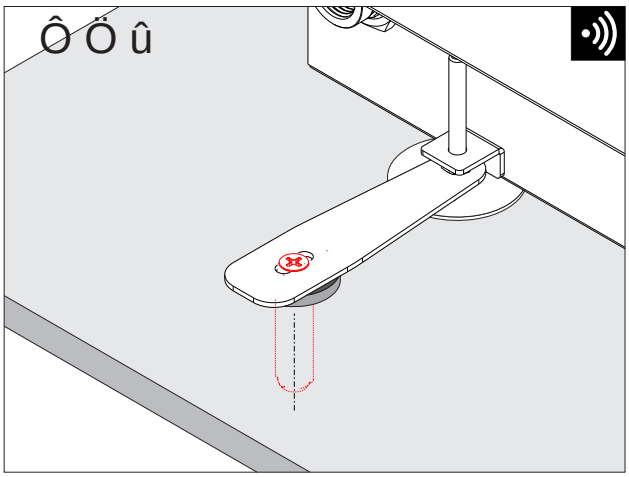
Ô Ö û

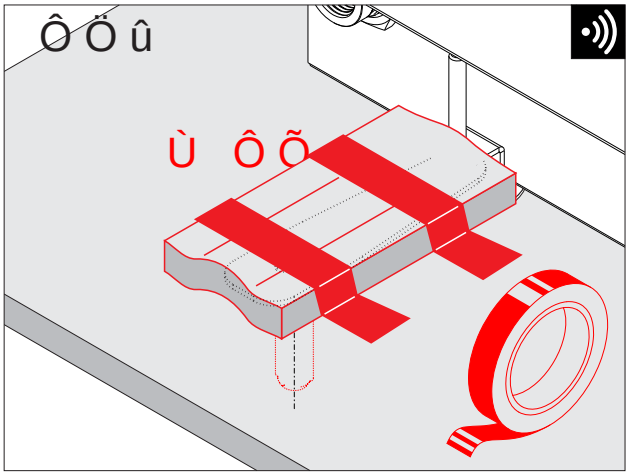
Ô Ö û
Ù Ô Õ

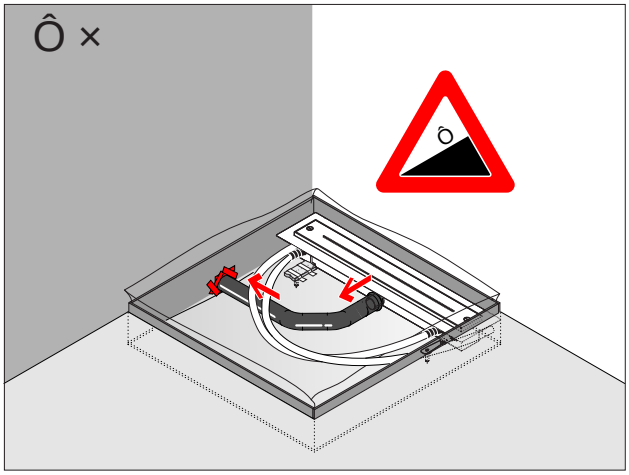
Ô ×
Ô

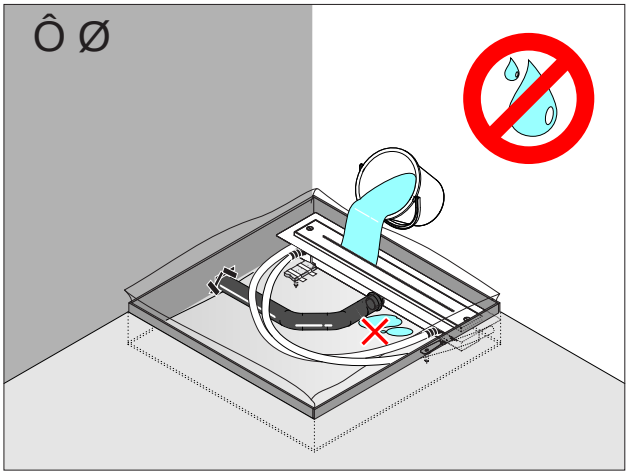
Ô Ø

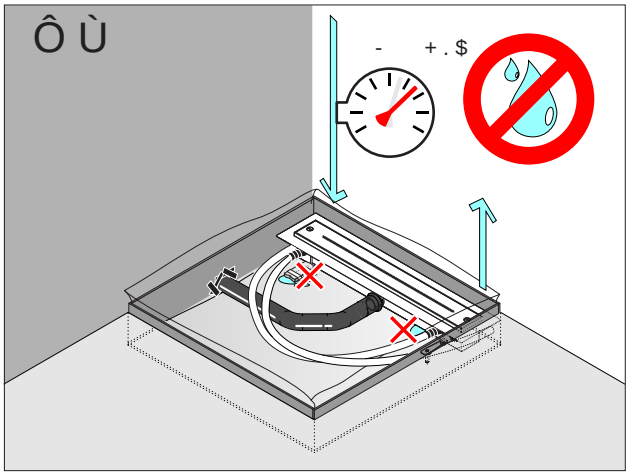
Ô Ù
- + . $

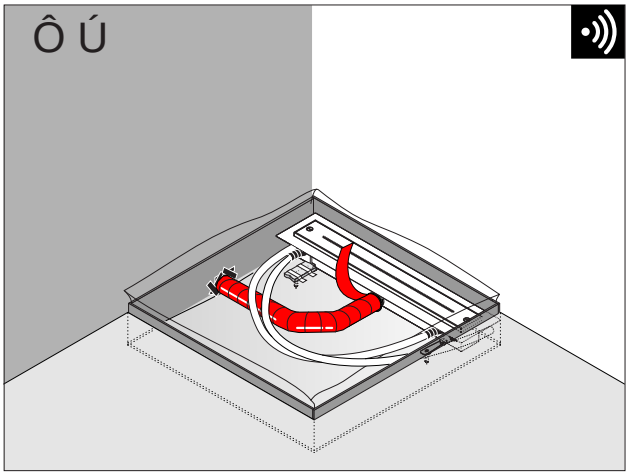
Ô Ú

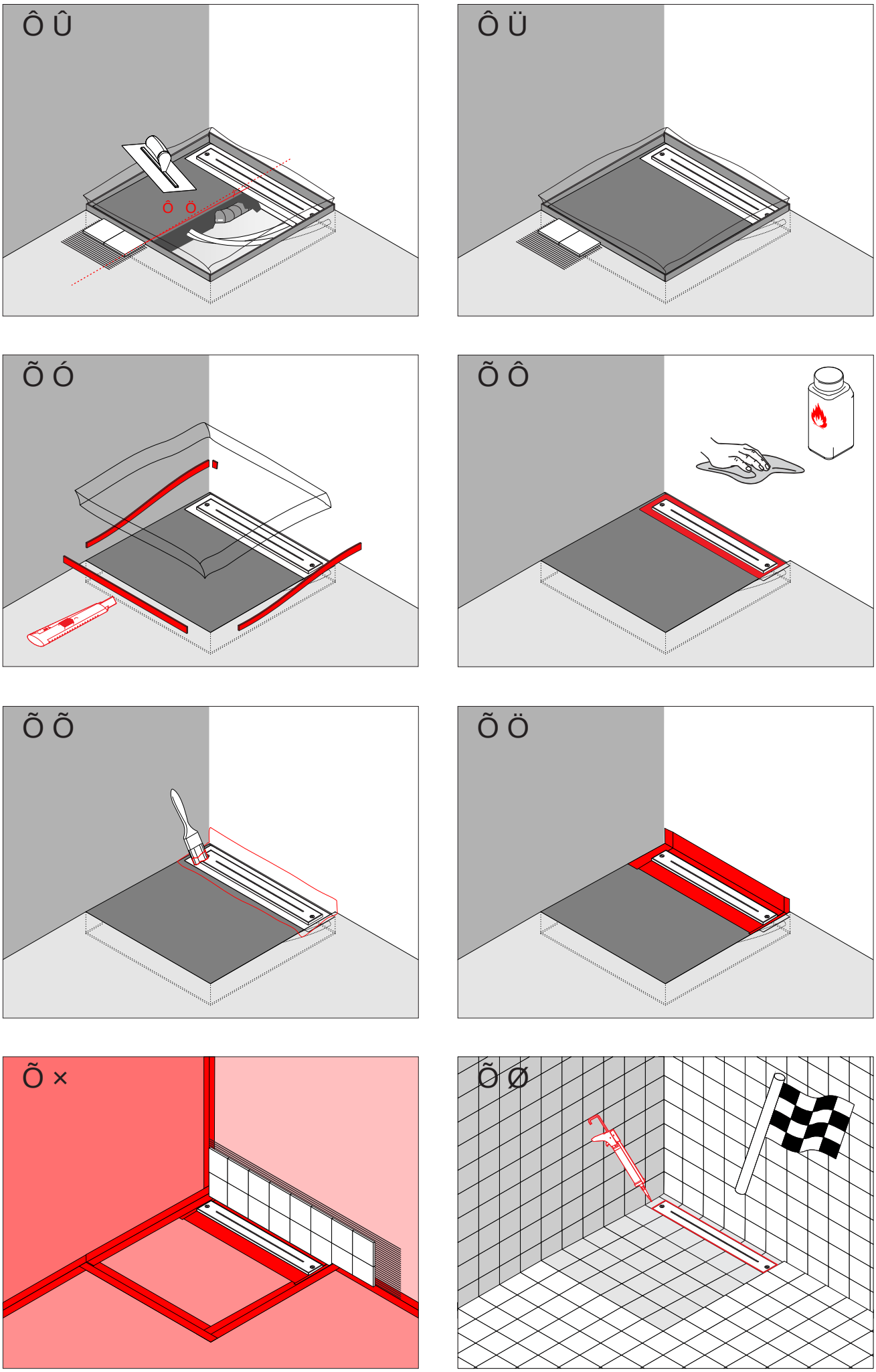

(GMDA9Y2OAFDAF=d+ d-;Lff

joulia

15'28#0* ,"

Reinigung
Entretien
Cleaning
Schoonmaak

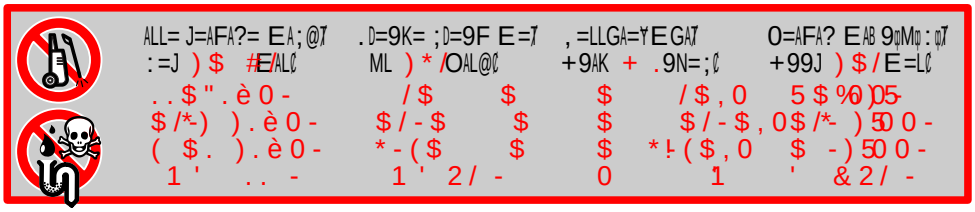

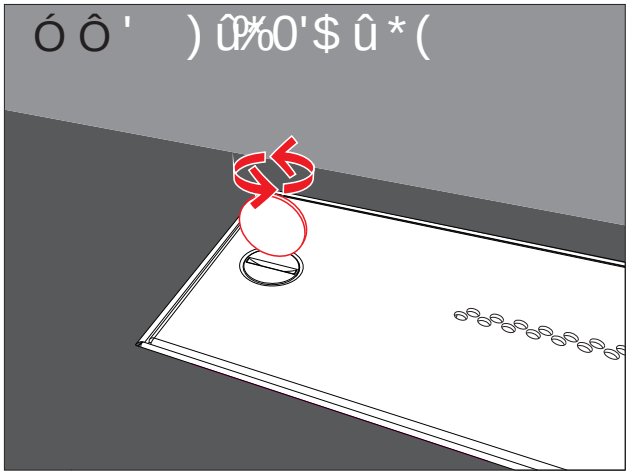

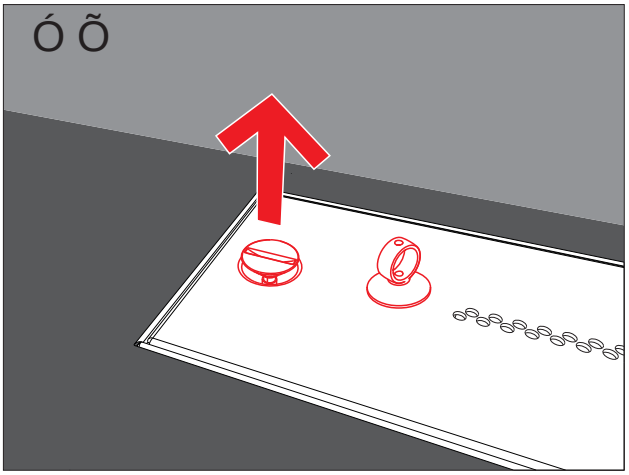

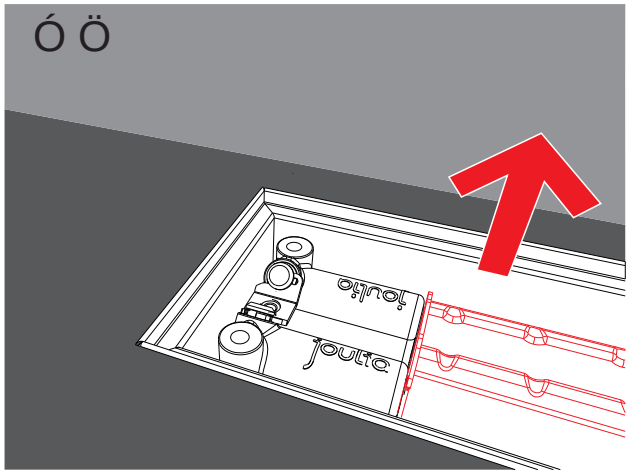

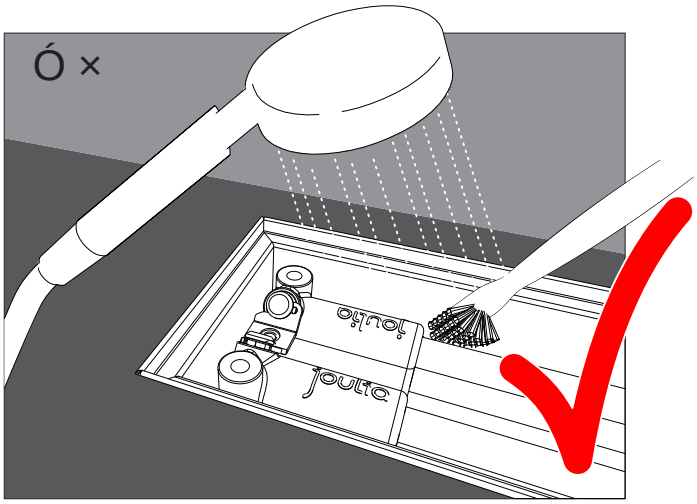

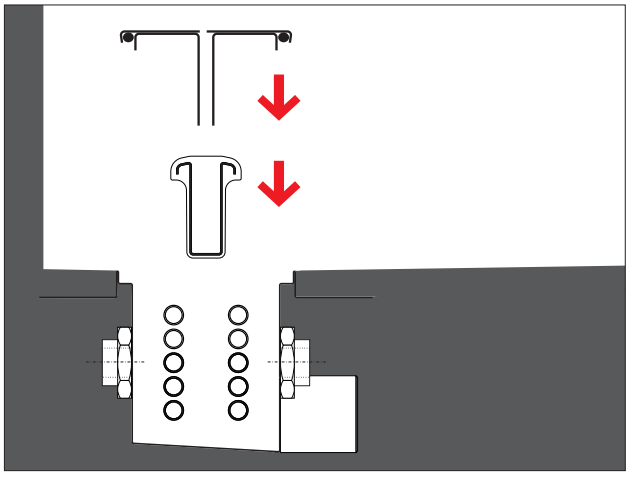

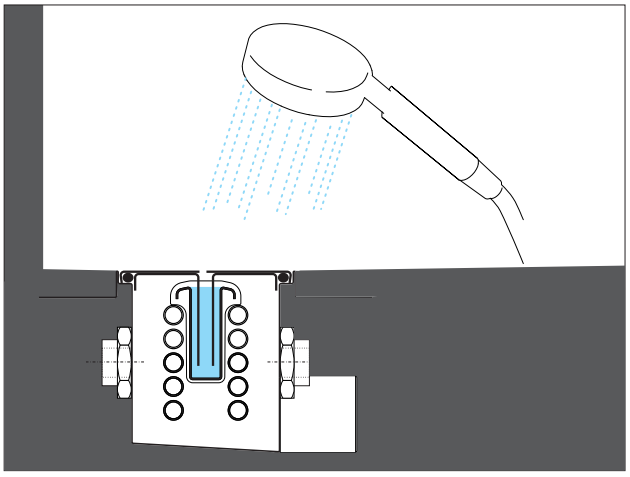

(GMDA9Y2OAFDAF=d+ d-;Lfr

YRfY

joulia
15'28#0* ,"

Ausbau Wärmetauscher
Démontage d'échangeur thermique
Disassembling of heat exchanger
Demontage van de warmtewisselaar

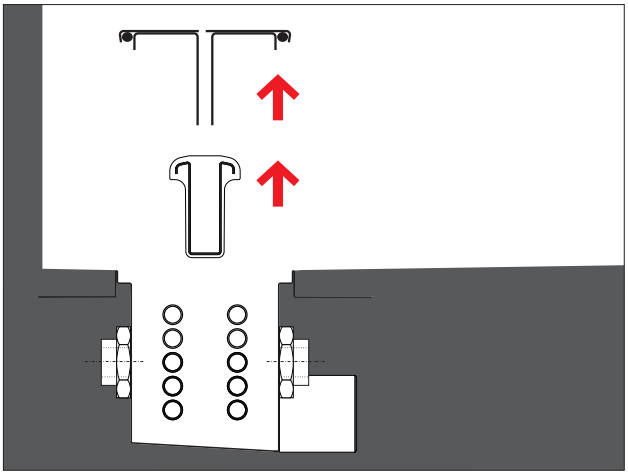

Ó Ô



5 9KK=JRM>DMKK 9 : KL=DD=F7
! GMH=J D?9DA E=FL9LAGF =F =9M7
! ML G>> O9L=J KMHHDQ7
" = O9L=JLG=NG=J 9>KDMAL=F7

Ó Õ

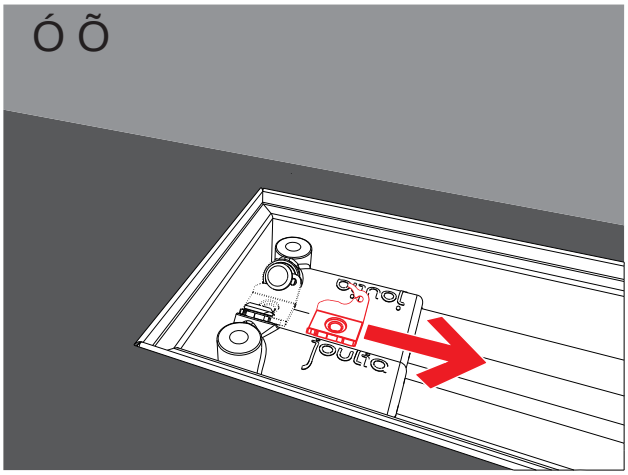

Ó Ö

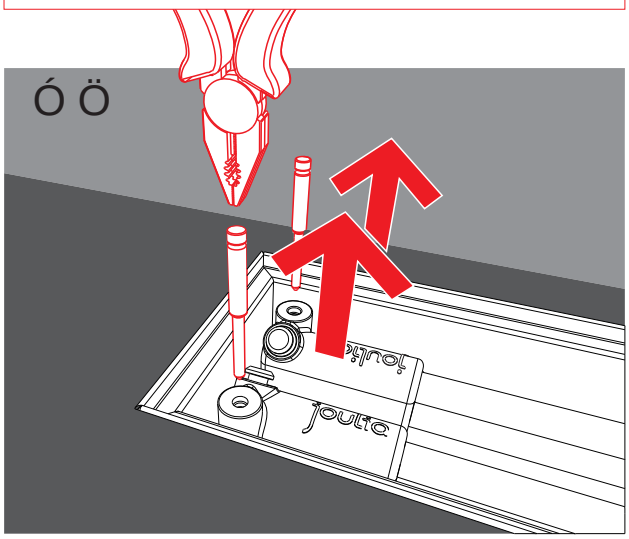

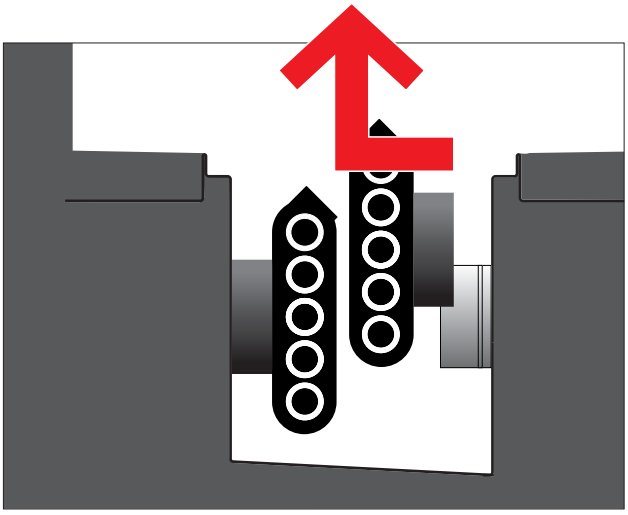

Ó ×

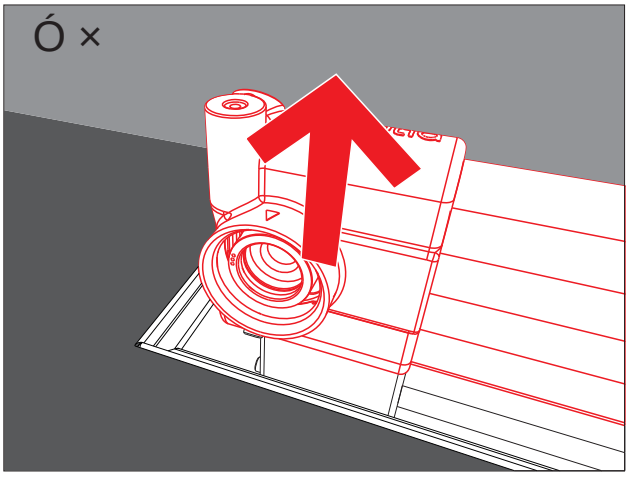

joulia
15'28#0* ,"

Leckagemelder
détecteur de fuites
leakage detector
lekkagedetector

055 -ûº%0'$ û*(

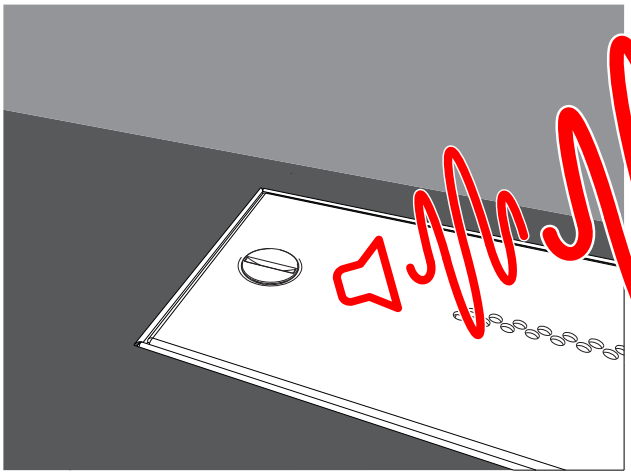

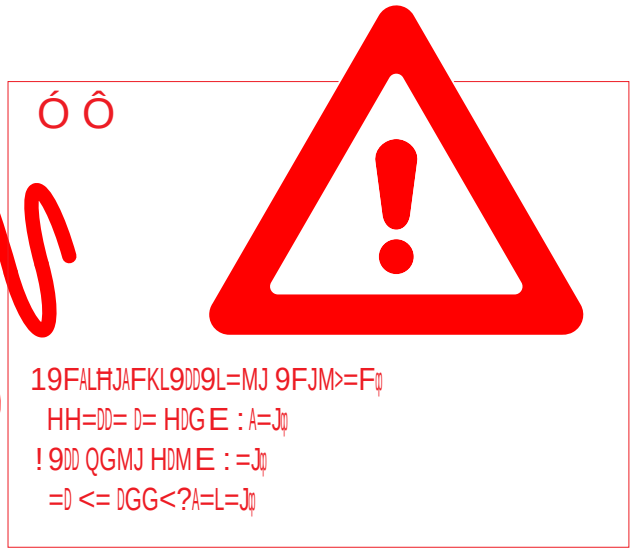

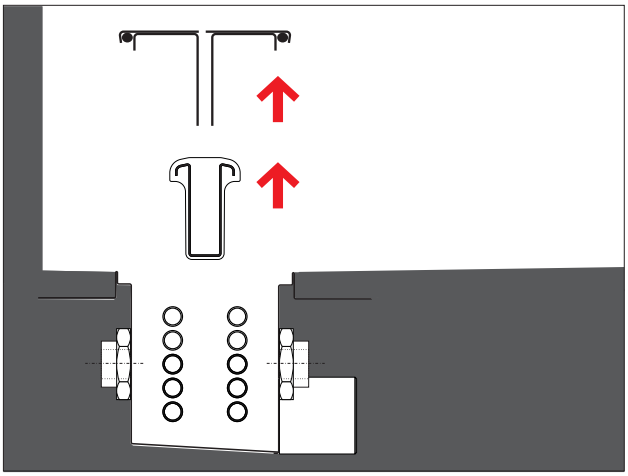

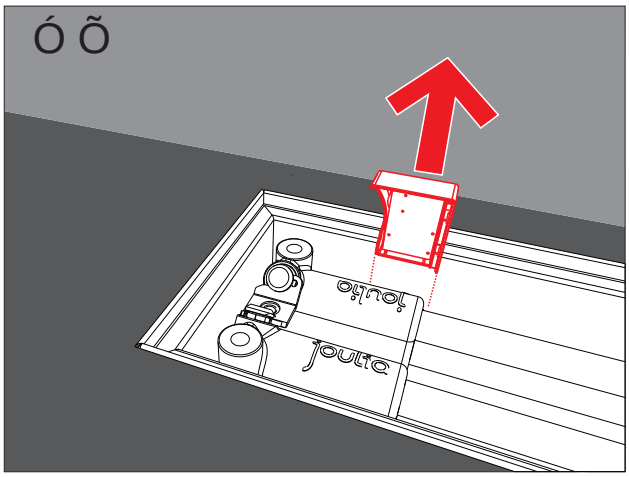

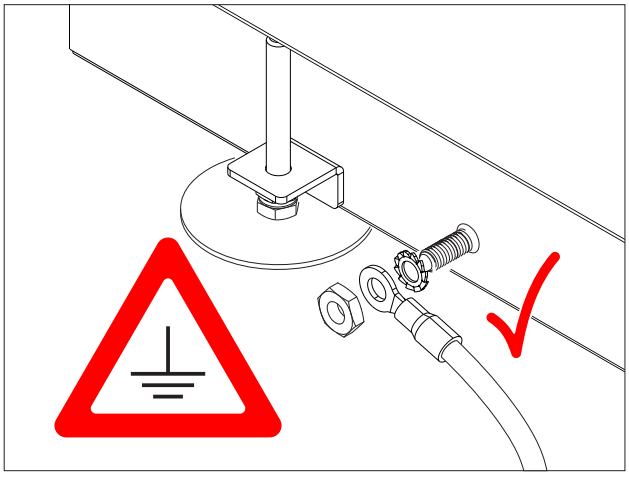

Potentialausgleich
Égalisation potentielle
Potential equalization
Potentiële vereffening

(GMDA9Y2OAFDAF=d+ d-;Lf f

YRùY

joulia
15'28#0* ,"

Ersatzteile
Pièces de rechange
Spare parts
Vervangingsonderdelen

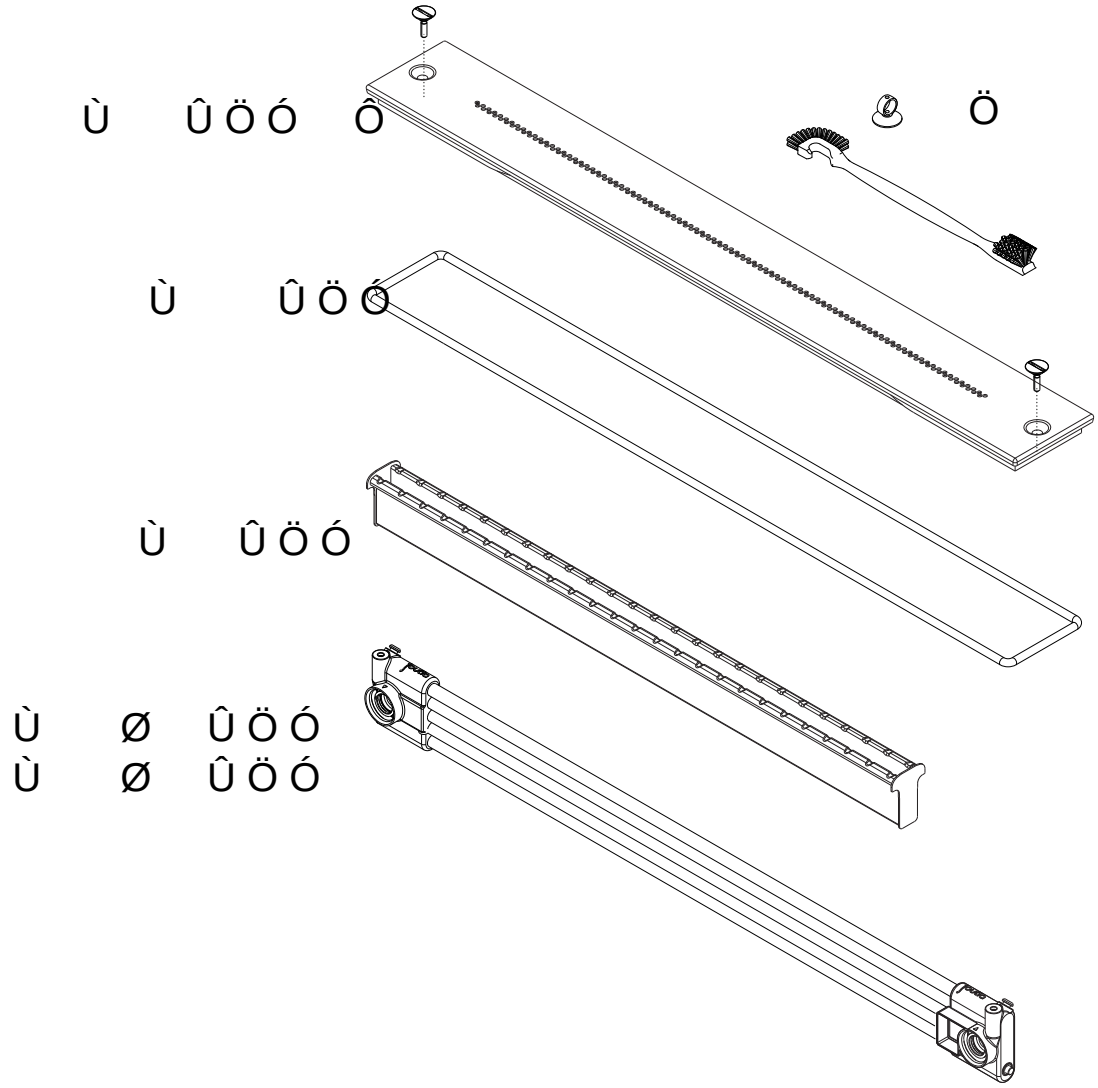

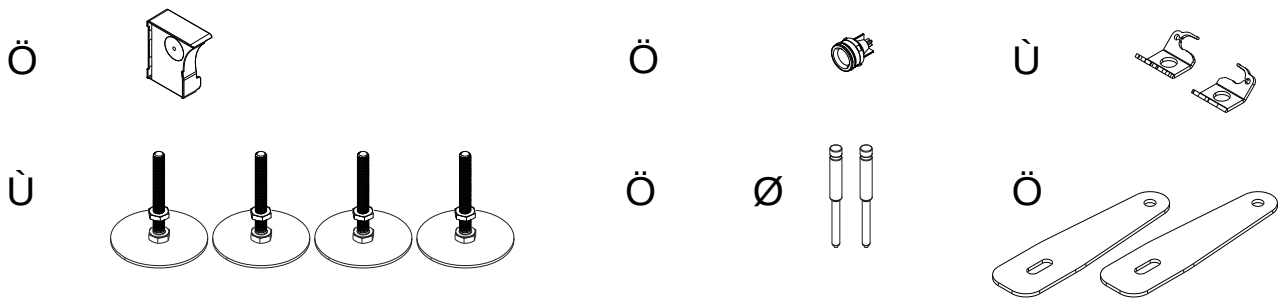

(GMDA9Y2OAFDAF=d+ d-;Lfr

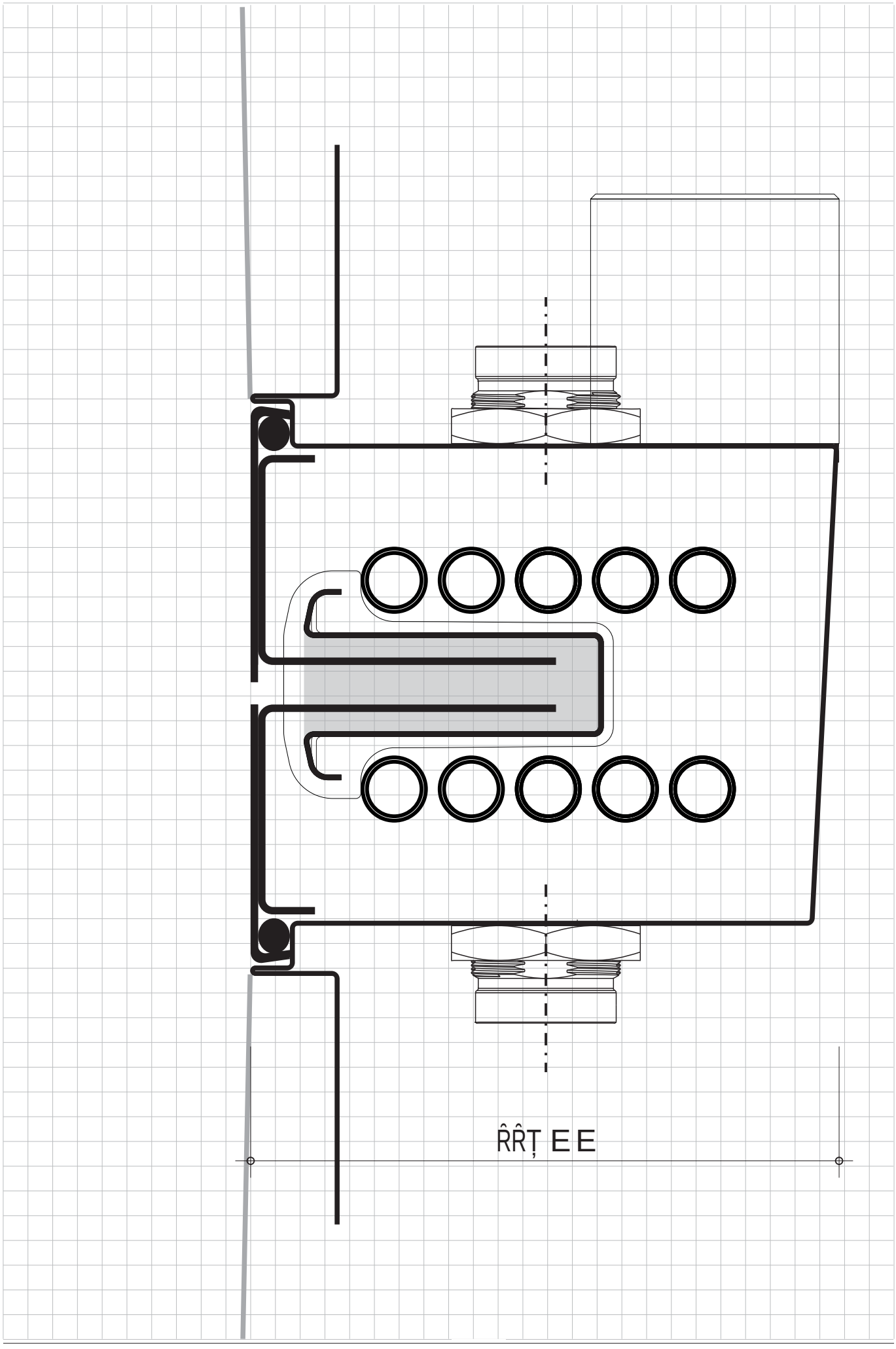

(GMDA9 %Y "MK;@=F EAL 5HJE=JŢ;C?=OAFFMF? 8=FLJ9DKLJ9KK= ŘŘÛ ŕÛŕŤÙ A=DY A=FF= 1OALR=JD9F< ⅃ ùŘ ďŕ9Ùŕ Ùûû ûù ŕŕ # ' ' * - % * 0*'($ û